Mansoura Engineering Journal (MEJ),Vol.18.No. 4, Dec. 1993.

DETERMINATION OF TORSIONAL MODE FRACTURE TOUGHNESS FOR ROTATING SHAFTS.

تقدير معامل حد اطاقة كسور اللي للاعمده الدواره

A.A.FATTAH.

ملخص

قدم هذا البحث طريقة تجريبيه لتحديد معامل حد اطاقة الاعمده الدواره لكسور اللي بناء على مجموعه من المعادلات التحليليه الجديده المقترحه لاول مره لتدقيق النتائج وذلك لعدم توافر الصيغ المناسبه في هذا المجال .

وقد تمت مقارنة النتائج التجريبيه مع النتائج التحليليه المقارنه لها واوضحت هذه المقارانات توافق النتائج التحليليه مع النتائج التجريبيه التي أمكن الحصول عليها من خلال جهاز خاص تم تطويره لهذا الغرض .

وتعتبر من أهم نتائج الخطوات التحليليه والتجريبيه المقترحه في هذا البحث هو تحديد قيمة معامل حد اطاقة كسور اللي للاعمده الدواره بناء على مقدار الانتشار النمطي للشروخ الدقيقه المتولده تحت تأثير اجهادات اللي في تلك الاعمده . وعلى ذلك فانه يمكن القول بأن النتائج المقدمه في هذا البحث قد اظهرت ان طرق التحليل التي تستخدم لتحديد قيمة معامل حد اطاقة الكسور في الاعمده الدواره يجب ان لا يرتبط بابعاد العينات المستخدمه .

وتعتبر الطريقه المقترحه في هذا البحث هي محاوله لتحديد خطوره انتشار كسور اللي في الاعمده الدواره واسعة الاستخدام في المجالات الصناعيه المختلفه وذلك لندره الابحاث في هذا المجال على وجه الخصوص.

ABSTRACT

An experimental analysis method for determining the torsional mode fracture toughness for rotating shafts is proposed based on a new calibration function.

Also, the results of the experimental investigation are compared with the corresponding analytical results. The agreement between the analytical and experimental results obtained by a specially developed instrumentation is reasonably good.

The main advantage of the new procedure presented in this work, is that it gives a fracture toughness value which is based on the start of physical crack extension. On the other hand the results obtained according to the new experimental method shows that, the method of analysis followed for the determination of fracture toughness value should give a K_{IIIc} value which is independent of specimen size and geometry.

KEY WORDS

Torsional mode, Fracture toughness, Plastic zone, Crack growth , Twist angle, Fracture mechanics, Stress intensity factor, Circumferentially cracked round bars.

INTRODUCTION

The fracture mechanics principals can be used in the design of components and structure, provided that the value of fracture toughness is known for the material used for the components or structure. Even though mode-III fracture mechanics parameter analysis for some of the structure configuration is reported in the literature, the standard procedure to determine torsional mode fracture toughness (K_{IIIc}) is not yet available.

The torsional mode fracture toughness K_{IIIc} is an important factor in the design and analysis of fracture of structures subjected to torsional loading (mode-III). The stress intensity factor, K_{III} incorporates the effects of the size and geometry [1]. On the other hand, the fracture toughness K_{IIIc} should be independent of size and geometry and should depend only on the material.

A meaningful K_{IIIc} should thus be independent of diameter or the depth of the crack in the circumferentially cracked round bar.

Moreover, whenever a precracked body is loaded, a plastic zone forms at the crack tip which grows as the load level increases. One normally assumes that the size of plastic zone, p_z is a function of mode-III fracture parameter K_{III} and yield shear stress τ_y only. But it is evident that the plastic zone size could indeed depend on the diameter and crack depth of the circumferentially cracked bars loaded to a given level of K_{III} and prepared from the same material with a given τ_y. Accordingly, one would expect that, small diameter bar may undergo considerable crack tip plastic flow, while the large diameter bar made from the same material may exhibit a predominantly elastic behaviour before crack initiation..

Thus, successful use of mode-III (torsional mode) fracture mechanics in design as well as in testing require that one evaluates the effect of size on the plasticity. Such analysis is of great importance in evolving corrective and remedial measures to prevent the occurrence of failures [2].

Thus ,the main objectives for conducting this research work, is to determine and describe the factors responsible for the failure of the rotating shafts which has been used in a wide sector of industrial field . Therefore, it is worth while to develop a new procedure for the calculation of plastic zone size formed ahead of

the crack tip during the torsional loading of the circumferentially cracked round bars, which is a very convenient specimen geometry for the determination of the torsional mode fracture toughness, K_{IIIc}.

Banerjee,S.,[3] has reported that, plastic zone size decreases as the specimen width increases.

Kokinen, [4] studied a circumferentially notched, thin-walled tube loaded in torsion, which could be idealized as a grooved plate loaded in longitudinal shear. Moreover, one must note that this analysis is applicable to the torsion of thin-walled tubes and hence, can not be used for the case of mode-III loading of circumferentially cracked solid round bars which is recommended for the measurement of torsional mode fracture toughness.

Irowin and McClintock [5] have used a different approach and obtained identical results for similar geometry.

Recently ASTM .E24 subcommittee [6] has circulated a draft standard procedure for the measurement of third mode fracture toughness of the material under torsional mode loading. The ASTM standard procedure for torsional mode measurement is similar to the ASTM-E395 standard for opening mode fracture toughness measurement.

ANALYTICAL INVESTIGATION

The stress field near an elastic crack tip can be characterized by the stress intensity factor, Thus, the stress intensity factor for torsional mode loading of circumferentially cracked round bars can be represented by a new proposed equation as follows:

$$K_{III} = [16.T/dc^{5/2}]\sqrt{(2a/dc)}\ [1+3(2a/dc)+3(2a/dc)^2+(2a/dc)^3] \qquad (1)$$

The calibration stress functions given by the proposed equation(1) and the equation reported by Harris [12]

$$K_{III} = [16\ T/\pi\ dc^3]\ \sqrt{\pi a}\ [1+ 64/9\ (2a/dc)]^{1/2} \qquad (2)$$

are plotted in the space of (K_{III} / τ_y) versus (2a/dc) values for different cracked round bar diameters, as shown in Fig.1.

In addition, it is also very important to take into careful consideration the dependence of the torque-twist correlation on the diameter of the cracked bar. Therefore, another formula has been proposed as the following:

$$(\theta_c/T)=(32L/G.d_c^4)\ [1+4(2a/dc)+6(2a/dc)^2+4(2a/dc)^3+(2a/dc)^4] \quad (3)$$

As would be discussed shortly, the amplitude of stress distribution designated by the stress intensity factor K_{III} is used to evaluate stress in a precracked body [7,8,9,10].

Therefore, like in the case of an uncracked body, one can write a failure criterion for a precracked body. Failure occurs if the value of stress intensity factor (SIF) reached the value of fracture toughness of the same material as:

$$K_{III} = K_{IIIc} \quad (4)$$

where K_{IIIc} is a critical value of K_{III} at which failure occur.

The amplitude of stress distribution, K_{III}, depends only on loading, size and geometry and is independent of the material resistance to failure. On the other hand, if equation(4) is to effectively predict failure, K_{IIIc} should be independent of size, geometry and loading. It is then obvious that K_{III} is similar to stress and K_{IIIc} is similar to strength.

EXPERIMENTAL APPROACH

The experimental approach which used in this work for determination of torsional mode fracture toughness, accounts for the effect of size and crack length dependent plasticity on the twist angle produced during the torsional mode loading of a circumferentially cracked bars [11,12].

In such cases , we need to use the fracture mechanics concepts to describe the mechanical environment at the crack tip [13,14]. The stress field near the crack tip can also be characterized by the normalized stress intensity factors. Thus, based on the proposed equation(1) the stress intensity factor for mode-III loading of circumferentially cracked round bars can be given in the form of dimensionless as the following:

$$(K_{III}/T)\ d^{5/2} = (16/\sqrt{\pi})\sqrt{(2a/dc)}\ [1+3(2a/dc)+3(2a/dc)^2+(2a/dc)^3] \quad (5)$$

The stress intensity factor is necessarily a linear elastic parameter and therefore its important to ensure that, the plastic zone at the crack tip is small as compared to other dimensions.

In the circumferentially cracked round bar,the shear stress may exceed the yield strength of the material at distance very close to the crack tip, thereby, a plastic zone forms near the crack tip. However, the plastic zone is small as compared to the specimen size, and the shear stress near the crack tip obey a $\sqrt{1/r}$ type of singularity. The strain distribution is of $\sqrt{1/r}$ type near the crack tip, but away from the crack tip is of linear type.

Strain at any point within the plastic zone is given by,

$$\gamma = \gamma y \ (pz \ / \ r \ )^{1/2} \tag{6}$$

and the plastic zone size is then

$$pz = (\gamma \ / \ \gamma y)^{2} \ r \tag{7}$$

where r is the distance from the crack tip.

The strain distribution in the ligament of a circumferentially precracked round bar is shown in Fig.2.

It has been shown by Irwin [5] that the mode-III plastic zone, at the crack tip of a crack is equal to an extension of the crack by an amount equal to $pz/2$.

In reality, when the structure is loaded, the plastic zone and the crack both grow simultaneously. Thus, the effective crack length a_e is defined as a sum of initial crack length a_o, the physical crack growth δa and the notional crack growth (crack extension) due to growth of plastic zone, a_{ex}.

$$a_e = a_o + \delta a + a_{ex} \tag{8}$$

Where a_{ex} is the crack extension (crack growth) value which can also be calculated using the following relationship :

$$a_{ex} = (1/2\pi)(K_{III}/\tau_y)^{2} \tag{9}$$

The growth of plastic zone and crack produces deviation in the linear T-θc relationship. The contribution by crack extension to the deviation from linearity can be calculated from the following equation:

$$(\Delta\theta/\theta c) = (1/C)^{1/2}(K_{III}^2/\tau y^2\ dc) \qquad (10)$$

Where C for austenitic steel ranges between 0.4 to 0.6

This contribution of the limited amount of crack growth to the deviation from linearity is also evaluated from the analysis of the R-curve data.

R-curve is defined as a plot of crack growth resistance in a material as a function of the physical crack extension δa.

Four papers are significant in the history of the R-curve concept. Irwin[15] first introduced the concept in 1954 and corrected in 1959. In 1961 Krafft[16] extended the concept by postulating that:

(a) for a given material and diameter, crack propagation resistance depends only on crack extension.

(b) an effective crack extension can be inferred from compliance measurements.

Clausing [17] showed that, the complete R-curve can be determined in one stable specimen by measuring load and crack length as the crack propagates.

Thomas [18] presented a method for determining the crack extension resistance curve (R-curve) from the maximum load against original crack length data for precracked fracture specimens.

American society for testing of materials have proposed a tentative recommended practice for R-curve determination E561-76T. Only a brief summary of this practice is given as the following.

1-the method is based on the assumption that, during slow stable fracturing the developing crack growth resistance is equal to crack extension force.

2-this recommended practice covers the determination of resistance to fracturing of metallic materials by R-curve.

Thus, using the relation between ($K_{III}/\tau y$) versus crack growth rate of ($a_o+\delta a$), one can determine the fracture toughness value K_{IIIc}.

EXPERIMENT

The experimental investigation carried out to verify the analytical plastic flow curves and the related results. The torque and the corresponding twist angle are measured during the torsion test on different circumferentially cracked bars prepared from the austenitic steel (AISI 316 SS).

The specimens were circumferentially notched. The notch produced by the use of asharp razor blade helps in an early and nucleation of fatigue crack at low values of load. Moreover, the use of the razor blade produce a very sharp notch tip radius.

In the first series of tests, the bar diameter is held constant and the aspect ratio, (2a/dc) is varied (2a/dc=0.08 to 0.4). In the second series of tests, the bar diameter is varied as (dc =5,10,15,20 and 25 m.m) at a given (2a/dc) value, where 2a is the crack length which is taken as a constant value for all specimen diameters. The crack depth was measured as recommended by the ASTM draft [6]. The exact value of crack length ($2a_e$) is measured after the fracture of the specimen.

The data obtained from the measurement has then been processed to obtain the plastic flow curves. The experimental plastic flow curves are generated and are then compared with the analytical plastic flow curves.

In order to measure the twist angle accurately and avoid consequent error in the measurement of K_{III}, it is convenient to use a special designed system to convert the angular displacement on the crack plane into the discs as shown in Fig.3. Thus, this system incorporates two discs which fits over the shaft, enables one to produce a relative angular displacement between the two discs for the direct reading of the twist angle. Therefore, the twist angle can be evaluated based on the following relationship:

$$\theta c = \tan^{-1}(\delta S/R) \qquad (11)$$

The precracked specimens were loaded in torsion mode up to different torque levels to obtain the torque-twist records. Moreover, based on the proposed equation(3), the variation in torque-twist correlation was evaluated according to different cracked bar diameters, and experimental values of ($\theta c/T$) are compared with the analytical values as shown in Fig.4.

The ratio between the torsional mode stress intensity factor K_{III} and the yield shear stress τ_y deduced from the following equation :

$$(K_{III}/\tau_y)=[32L/G\ \sqrt{\pi}.dc^{3/2})].(T/\theta c).\sqrt{2a/dc}./1+(2a/dc)$$

$$[1+3(2a/dc)+3(2a/dc)^2+(2a/dc)^3] \qquad (12)$$

required to be known for twist-torque relationship. Thus, plot of this relationship is given as shown in Fig.5.

RESULTS AND DISCUSSION

The torque-twist for circumferentially cracked round bars loaded in mode-III were obtained. The torque was converted to K_{III}, using the relationship as given in equation(5) hence, the terms (K_{III}/T) and ($K_{III}/\theta c$) were evaluated. Thus, the flow curves are plotted as shown in Fig 6a. and Fig 6b.

Using the experimental relationship between ($K_{III}/\tau_y.dc$) and ($\Delta\theta/\theta c$) as given in equation(10). flow curves were plotted as shown in Fig.7. for different specimens diameter.
The flow curves exhibit no significant pattern to indicate the effect of diameter on the plastic flow.

The comparison of the experimental and analytical results show a little deviation. The possible reason for this deviation could be the differences between the configuration of circumferential notch considered in the theoretical analysis and the one actually produced on the specimens for the experimental investigation.

Another source of deviation could be the non-uniform, eccentric fatigue crack developed during the precracking stage. On the other hand, the shear modulus values obtained experimentally are lower than the shear modulus values reported in the handbooks.

One should also note that, the deviation in the results could be originates from the inherent variation in the properties of the material from one specimen to another. This will produce an erroneous results. All these factors added together can produce the deviation between the experimental and analytical results.

From the fundamental consideration, the torsional mode fracture toughness, of a material used for manufacturing the rotating shafts is defined as the value of stress intensity factor, at which the crack extension starts.

For a meaningful and reliable measurement of K_{IIIc}, it is necessary to identify the start of crack extension and therefore these results can be used to determine the torsional fracture toughness value (K_{IIIc}).

R-curve characterize the resistance to fracture of material during incremental slow-stable crack extension. An R-curve is a plot of crack growth resistance in a material as a function of actual or effective crack extension. K_R is the crack growth resistance expressed in unit corresponding to K_{III}. K_{IIIc} is the plane stress fracture toughness and is equal to the value of K_R at a particular instability condition determined during an R-curve test.

The R-curve describes the variation in K_R with crack length, $2a_o$. It consists of a plot of K_R versus δa, where K_R represents the driving force required to produce stable crack extension (δa) prior unstable crack growth at K_{IIIc}.

The K_{IIIc} value that results for a given crack length, a_o is the value associated with point of tangency between the line representing the applied torque and the R-curve itself as shown in Fig.8.

The solid lines represent the variation in K_{III} with crack length, 2a, for constant torque. That is, for a given torque level and increasing crack length (2a), K_{III} will increase as given in the proposed equation(1).

The dashed line represent the increase in K_R with increasing torque and increasing crack length for three different initial crack lengths.

The K_R value is always calculated by using the effective crack length, a_e, and is plotted against the actual crack extension, a_{ex}, that takes place physically in the material during the test.

The three point of tangency where $K_R = K_{IIIc}$, represent points of instability, or critical plane-stress intensity factor. However, the points of tangency give the critical value of stress intensity factor K_{IIIc} which can be considered as the fracture toughness value for the material under test.

CONCLUSIONS

1-Based on the new K_{III} calibration function proposed in this investigation, an experimental method of analysis for determination of the torsional mode fracture toughness is presented.

2-The method gives a fracture toughness value which is based on the start of physical crack extension.

3-The fracture toughness value as determined according to the new procedure of the proposed method of analysis is independent of size and geometry of the specimens.

4-The plastic flow curves of specimen with different diameters and given (2a/dc) values, exhibit no significant pattern to indicate the effect of specimen diameter on the plastic flow.

5-The plastic flow curves enables to define the limit of linear elastic fracture mechanics.

6-The SIFc evaluated for round bars (rotating shafts) from the experimental processes proposed in this work are in reasonable agreement with the analytical results.

7-The experimental method of analysis proposed in this investigation constitutes the basis of a method of determining the torsional mode fracture toughness, K_{IIIC}.

NOMENCLATURE

δa	physical crack length.
τy	yield shear stress.
θc	twist angle for cracked bar.
a_o	initial crack length.
2a	crack length (a is the crack depth).
a_{ex}	crack extension due to the growth of plastic zone.
C	material constant = $\tau y/\sigma y$.
dc	circumferentially cracked bar diameter.
G	elastic modulus of rigidity.
K_{III}	torsional mode stress intensity factor.
K_{IIIC}	torsional mode fracture toughness.
K_R	crack growth resistance.
PZ	plastic zone size.
T	applied torque

REFERENCES

1- Sih, G.C., and Tzon, D.Y..
"Mechanics of nonlinear crack growth effect of specimen size and loading step" in proceedings on modeling problems in cracktip mechanics, edited by J.T Pindera, Martinus Nijhoff Publishers, the netherlands, PP. 155-169, (1984).

2- Paris, P.C., and Sih, G.C.
"Stress analysis of cracks in fracture toughness testing and its application" ASTM. STP 381.PP. 30-61, (1985).

3- Banerjee, S.,
"Influence of specimen size and configuration on the plastic zone size, toughness and crack growth" Engg. Fract. Mechanics, vol.15, PP 343-390, (1981).

4- Koskinon, M,F.,
"Elastic - plastic deformation of a single grooved flat plate under longitudinal shear" Trans. ASME PP 585-594,(1963).
5- McClintook, M.F., and Irwin, G.R.,
"Plasticity aspect of fracture mechanics" ASTM, ATP 381 PP 84-113, (1965).
6- ASTM "Draft standard on the measurement of mode-III fracture toughness parameter". ASTM E 24. PP 1-5. (1981).
7- Kudriavtsev, B.A., and Parton, V.Z.,
"Torsion and extension of circular cylinder with external annular slit" P.M.M., Vol. 37, PP 316-325, (1973).
8- Knott, J.F.,
"The fracture toughness of metals" J. Strain analysis, vol. 10 (1975).
9- Zheng, X.
"Notch strength and fracture toughness" I.C.E proceedings. Ed. by V.S. Goel Utah, U.S.A PP 41-44, (1985).
10- Sih, G.C.,
"Fracture toughness concepts"., properties related fracture toughness, STP 605, American Society of Testing and Materials, PP. 3-15, (1976).
11- Bluhm, J.F.,
"A model for the effect of thickness on fracture toughness" ASTM 61, (1961).
12- Harris, D.O.,
"SIF for hollow circumferentially notched bars" Trans, ASME PP. 49-54, (1967).
13- Broeck, D.,
"Elementary engineering fracture mechanics" Sijthoff and noordhoff, Alphen, (1968).
14- Tada, H.,
"The stress analysis of cracks" Handbook, research corporation, Hollertown (1973).
15- Irwin. G..R., and Kies, J.A.,
"Critical energy rate analysis of fracture strength" weld, J. vol 33, PP193-198,(1959).
16- Krafft, J.M., Sullwan, A.M., and Boyle, R.W.,
"Analysis of the plastic flow near a crack front as an energy-dissipation process which resists fracture of ductile metals" Crack Propagation Symposium, Vol. 1, PP. 2-28., (1961).
17- Clausing. D.P.
"Crack stability in linear elastic fracture mechanics" Int. J. Fract. Mech. Vol. 5, PP. 211-227., (1969).
18- Thomas, W. O.,
"Estimating the R-curve from residual strength data" in proceeding on mechanism of fracture Ed. by V.S. Goel Utah. U.S.A PP. 106-113, (1985).

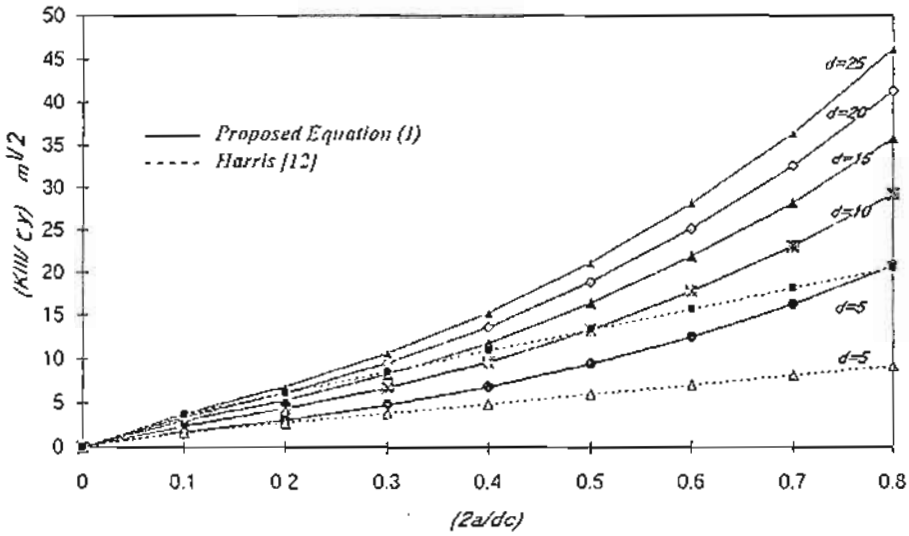

Fig. 1 Comparison of KIII calibration functions for the torsional mode loading of the circumferentially cracked round bars.

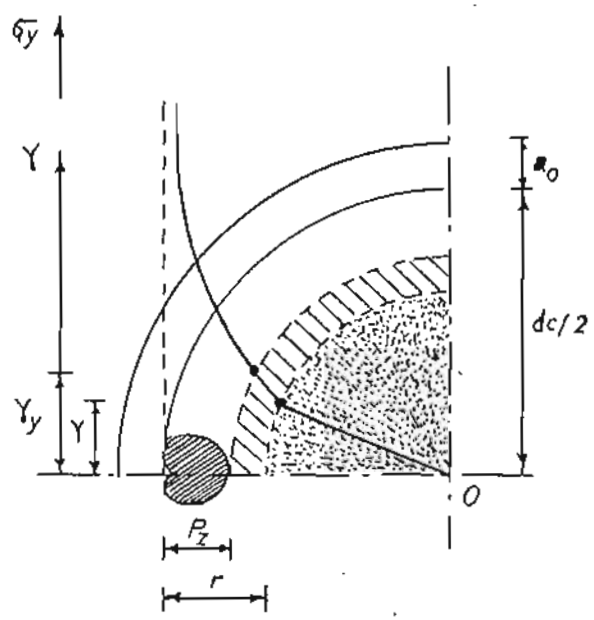

Fig. 2 Strain distribution change from linear to nonlinear in the ligament of a circumferentially precracked round bars.

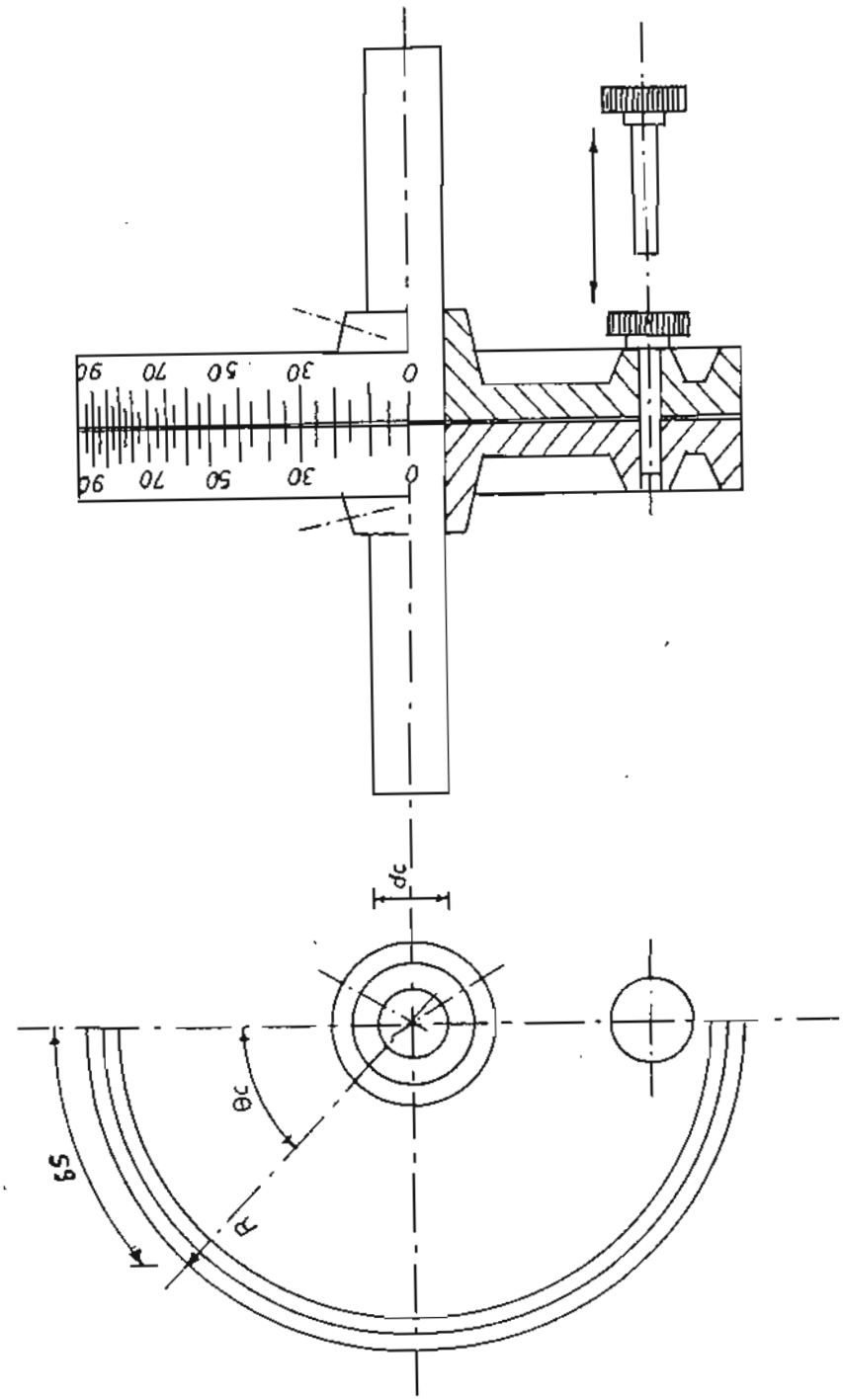

Fig. 3 A schematic of the special designed system for the measurement of twist angle.

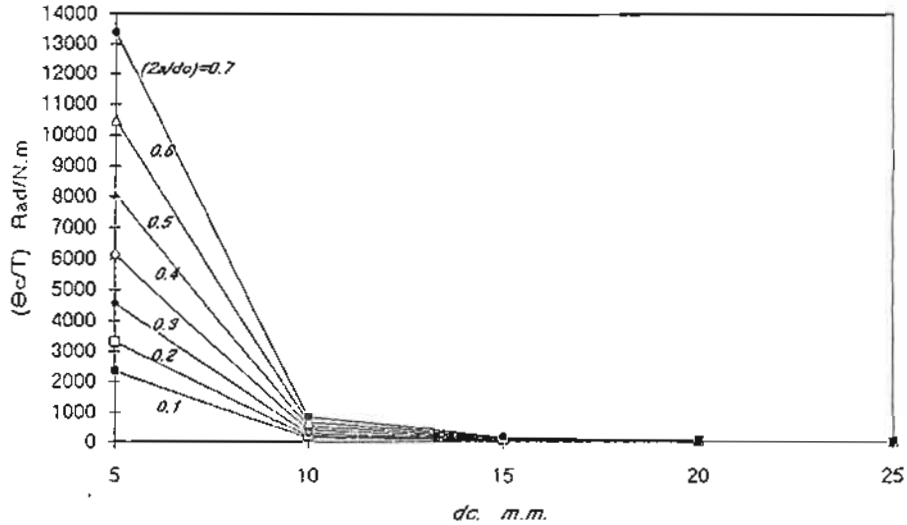

Fig. 4 The dependence of torque-twist correlation on the diameter of the cracked bar

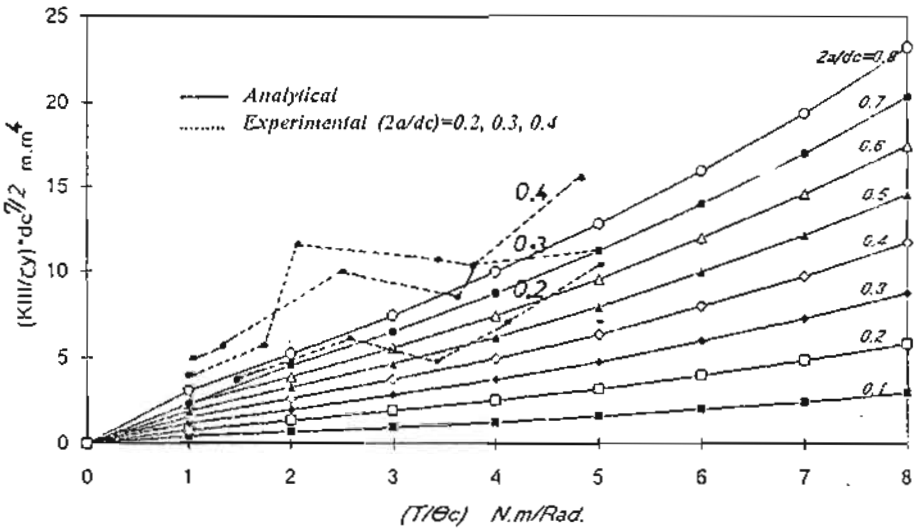

Fig. 5 Effect of crack depth ratio (2a/dc) on the variation of plastic flow with the torque-twist ratio

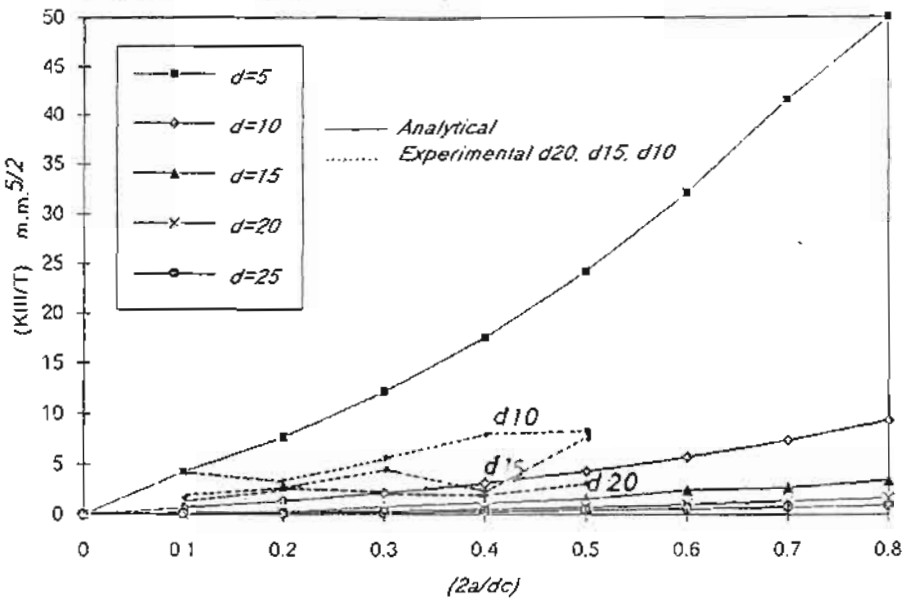

Fig. 6a Dependence of the normalized stress intensity factors on the crack depth ratio

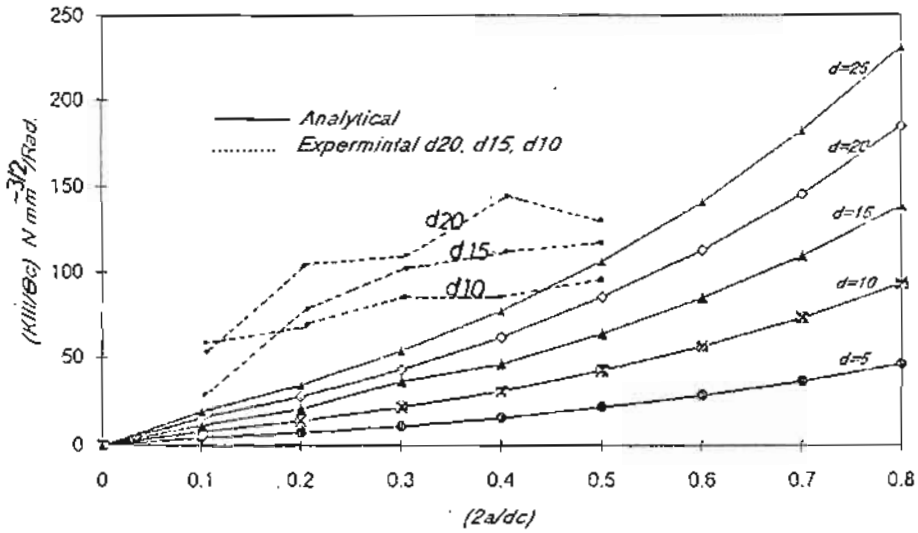

Fig. 6b Effect of crack depth ratio (2a/dc) on (KIII/Oc) for different specimen diameters

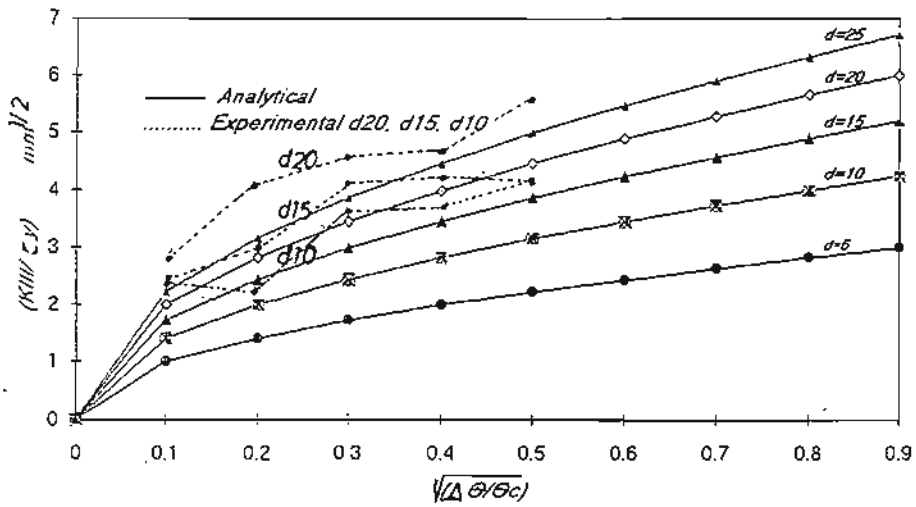

Fig. 7 Comparison of experimental plastic flow curves with analytical curves for different specimen diameters and (2a/dc) ratio.

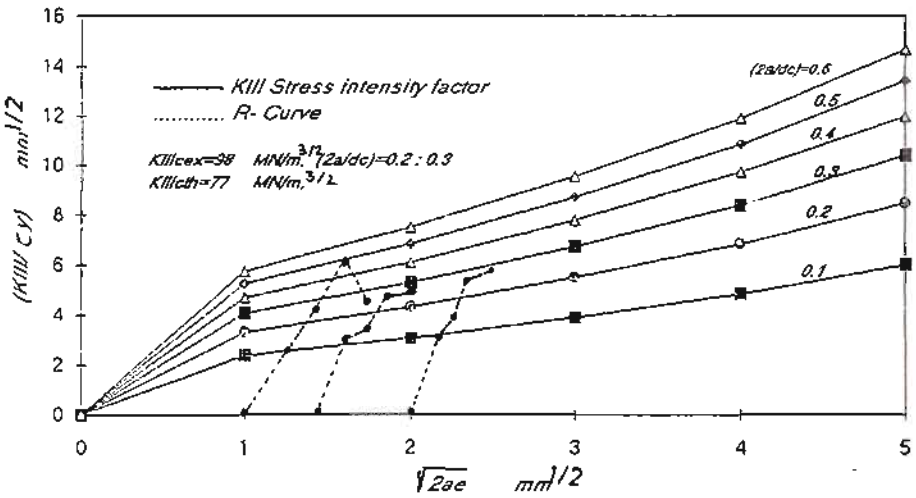

Fig. 8 Proposed procedure for determing KIII under different condition of initial crack length, ao , using R-curve (resistance curve analysis)