Military Technical College
Kobry Elkobbah,
Cairo, Egypt
May 29-31,2012

6h International Conference on
Mathematics and Engineering
Physics (ICMEP-6)

Application of Laser-Capillary Tube – Lens Interferometer technique for measuring free amino acids in humans and plants

H.El Ghandoor ,N.Farag , E.A.Abo Mostafa, and A.Ismail
Faculty of Science Ain Shams University,
Abbassia 11566, Cairo Egypt

Abstract

The relation between free branched amino acids concentration and refractive index can be revealed using a new laser interferometry technique

In previous work, glucose level in blood plasma was measured using laser interferometry in a capillary tube and demonstrated that the technique is feasible, affordable, and precise **(1)**. In this study, we had established laser fringes as finger prints for the three branched amino acids: leucine, isoleucine and valine in order to determine their concentrations until values as small as nano-milligram in a solution. Branched amino acids in order to determine their concentration within plants. Solutions of the three branched amino acids (leucine, isoleucine and valine) were used as standards at different concentrations to obtain more clear information about the relationship between their concentrations, molar refractivity and refractive index as an initial step in order to measure their concentration in a faster and cheaper way. The relationship between the molar refractivity, refractive index and the amino acid concentration is discussed.

2-Introduction

Branched chain amino acids (BCAA) are essential in nature because humans and animals can't synthesize inside their bodies. These amino acids can only be synthesized by plants and microorganisms and only obtained by other organisms via diet. Despite of the BCAA importance in human diets, not much is known about their metabolism in plants (2). The synthetic pathways of leucine, isoleucine, and valine are relatively well established (3). Yet, not much is known about how the activity of the same set of enzymes leads to different products, valine and isoleucine. Leucine biosynthesis is different from the other amino acids as it branches off at the a-ketoisovalerate intermediate and undergoes four further enzymatic transformations. The whole biosynthetic and degradation pathways are shown in Figure 1 and 2, respectively. (4). The BCAA degradation had been shown to be essential for peptide elongation, glutamate recycling, and branched-chain

Ester formation, branched-chain fatty acid synthesis (5, 6, 7, 8) and act as a respiratory substrate during senescence (9). Currently, there are several methods to accurately measure free amino acids concentrations, hormones, macromolecules and others in plants including HPLC, ELISA and Tandem Mass spectrometry. All these techniques are available only at specialized laboratories and require special expensive reagents and Kits. Optimizing this technique for the measurement of BCAA concentrations will be indeed a revolution in quantitative biotechnology and other molecules down the list will follow. To date, free amino acid analysis can take place by gas chromatography (GC) and high performance liquid chromatography (HPLC). Despite their high accuracy for measuring picomole levels of individual amino acids they are time consuming and require pre- or post-column derivatization and long chromatography (Fisher et al, 2001). Most of the other methods such as those using ninhydrin reagent and automated amino acid analyzer are usually established to measure total free amino acids but not individuals one at a time Moore and Stein (1948, 1954; Doi et al. (1981. The importance and utility of determining small amounts of amino acids in samples is widely recognized,

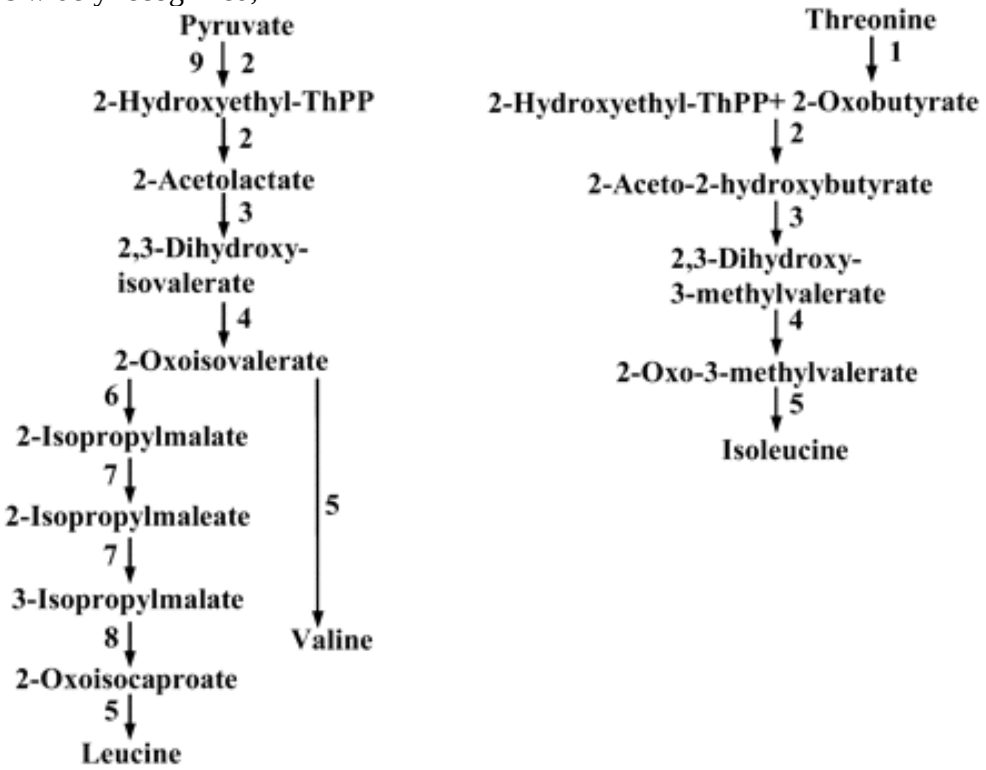

Fig. 1 Biosynthesis of leucine, isoleucine and valine in plants

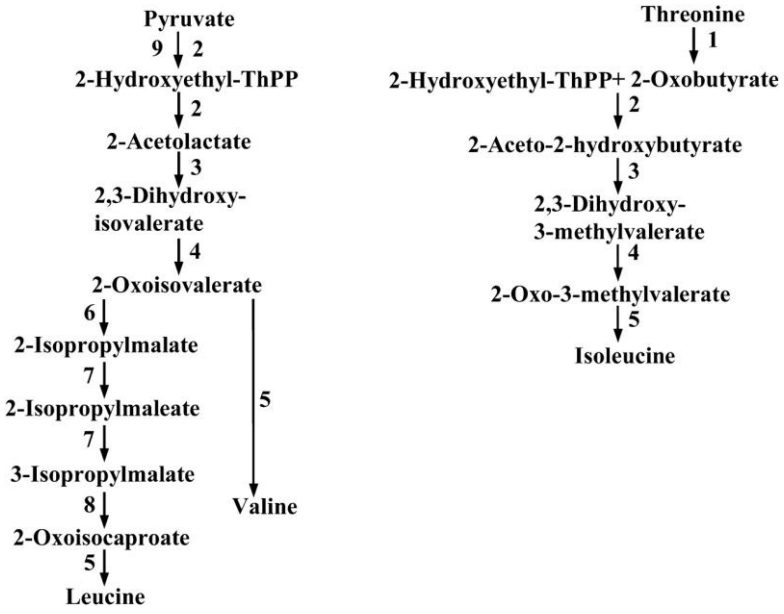

Fig. 2. Degradation of leucine, isoleucine and valine in plants.

Materials and methods

Preparation of samples

The three amino acids were prepared by dissolving into sterile distilled nano-pure water at concentration of 1 M as stock. Stock solutions were serially diluted from 10 mM then serially diluted into 5 mM, 2.5 mM, 1.25 mM, 0.625 mM, 0.3125 mM and 0.25625 mM. These solutions were used to establish the relationship between laser fringes, refractive index and the amino acid concentration**.**

Experimental Setup

A schematic diagram of the experimental setup is shown in Fig. 3. A He-Ne laser of wavelength 632.8 nm and 10-mW power has been used as a light source. The laser beam was expanded using a microscope objective lens, and a collimating lens was used to produce a parallel beam of laser light. This beam was allowed to be passed through a cylindrical lens arrangement that produces a thin sheet of laser light. Capillary tubes (with inner and outer diameters 0.9 and 1.2 mm, respectively) filled with samples and placed on a fixed holder, one at a time, and then illuminated by the laser sheet. The rays passing through the capillary tube will form a transverse interference fringe pattern on the screen. The resulting transverse interference fringe pattern was formed at the capillary tube itself and also in the region behind it. A digital image of the projected interference pattern was then taken using a CCD

camera, stored in a computer and later retrieved for data processing and analysis. Samples with variable level of leucine will be measured at different room temperatures and Optical parameter (incident angle, wavelength of laser, thickness of sample etc…)

Finally, the results of the test will be applied in parallel runs with for each amino acid standards over the designated range of dilution in order to estimate the relation between the concentration, the refractive index and the corresponding fringes patterns. Before image analysis takes place .the fringe pattern image should be converted from analogy format to digital format. This is achieved by using MATLAB-based software that was developed to search for the maximum and minimum brightness of the fringes and to report them as functions of position (x and y). This gives the intensity of constructive and destructive interference fringes respectively. Transverse interference fringes of one of the standard solution of BCAA used in this study (Fig.4-a) and digitally processed fringes samples (Fig.4-b). The refractive index of the samples enclosed inside the capillary tube can be determined by measuring the angle of deflection (ε), of the ray passing through the sample under investigation. To measure the deflection angle (ε), experimentally Abel's transform should be used as explained in the following section.

Before image analysis takes place .the fringe pattern image should be converted from analogy format to digital format. This is achieved by using MATLAB-based software that was developed to search for the maximum and minimum brightness of the fringes and to report them as functions of position (x and y). This gives the intensity of constructive and destructive interference fringes respectively. Transverse interference fringes of one of the representative images for one of the standard amino acids used is shown in Fig.4-a, an example of digitally processed fringes samples is shown in Fig.4-b. The refractive index of the liquid enclosed inside the capillary tube can be determined by measuring the angle of deflection (ε), of the ray R6 passing through the liquid under investigation. To measure the deflection angle (ε), experimentally Abel's transform should be used as explained in the following section.

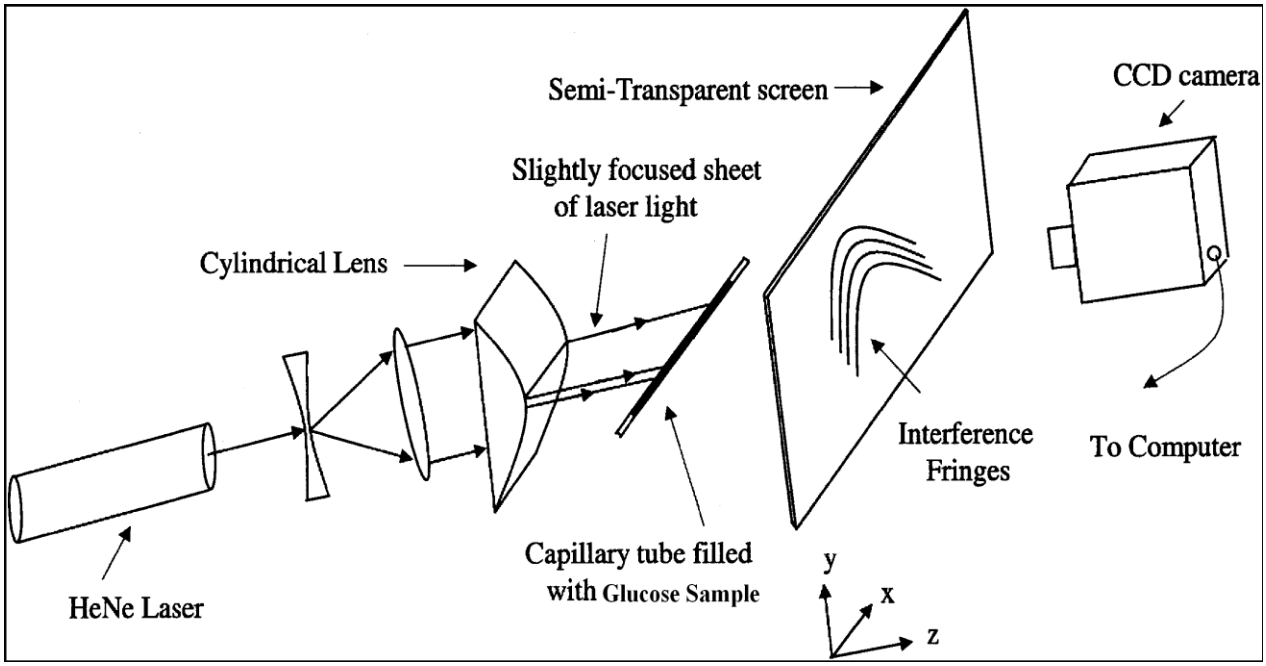

Fig. 3. Schematic diagram of the experimental set-up Theory

Results

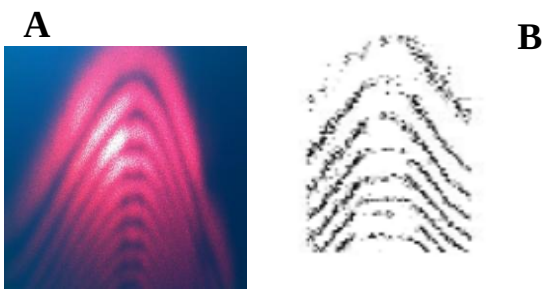

Fig. 4. Laser interference fringes A: normal image and B: digitized image.

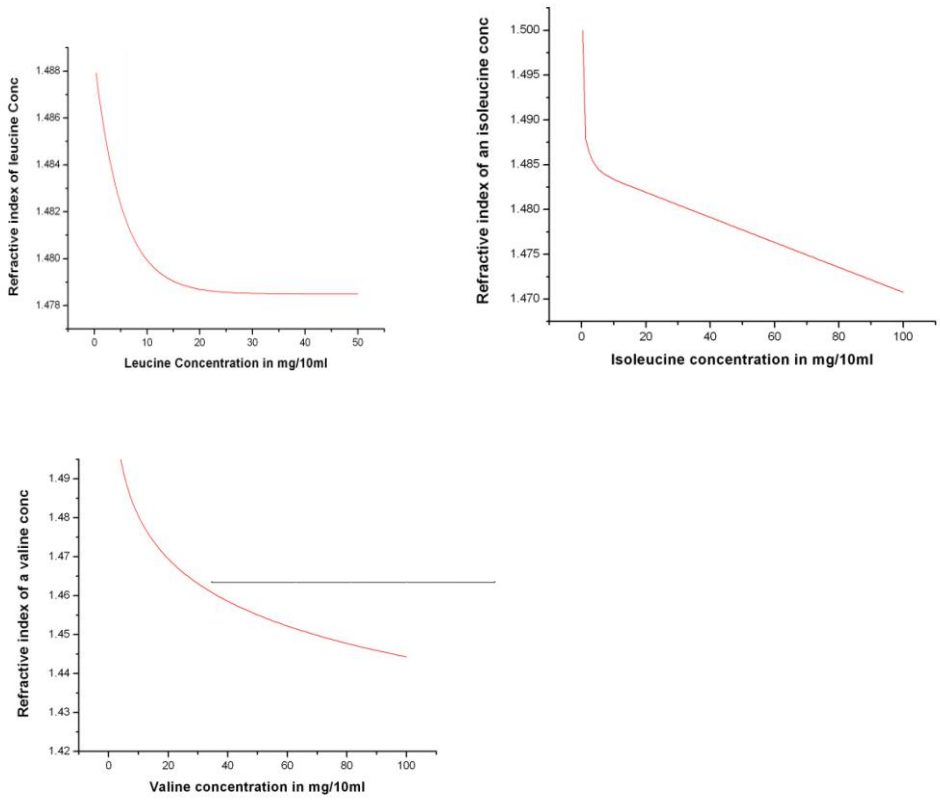

Figure 5: The relation between the leucine, Isoleusine and valine concentrations and their corresponding refractive indexes.

The refractive index and concentrations of the used amino acids exhibited an exponential behaviour. From the curves, it is found that the equation of the fitted curve for Leucin is:

$$y = ae^{(\frac{-x}{b})} + c$$

a= 01005

b=5.16569

c = 1.47849

The equation of the fitted curves for Isoleucin is:

$$y = ae^{(\frac{-x}{b})} + c$$

a = 2.39587

b= 17099

c = -0.91114

The equation of the fitted curves for Valine is:

$Y=a\chi^{b}$

a=1.5174
b=-0.01073

When these equations are differentiated and equated to zero, it did not give any inflection points because all curves are exponentially decreasing all over the x coordinate (concentration).

Discussion

The ray-tracing diagrams of a few of the possible combinations that can produce interference fringes are shown in Fig. 6. A fringe can be formed as a result of interference between R3, which passes entirely through the wall of the capillary tube, and R6, which passes perpendicularly through the middle of the capillary tube. Another fringe can be formed by the interference between a laser ray that enters the sample at an angle, i.e., R5, and one of the non-refracted rays that passes through the air on top of the capillary tube, i.e., R2, and a different fringe can also be formed due to interference between R4, a ray that suffers total internal reflection at the glass/sample interface, and another ray from the group that passes on top of the capillary tube, i.e., R1.

The reason that the interference fringes are bell-shaped has to do with two combined factors. The first is the curved surface area of the capillary tube and the second is the fact that the combination of the lenses in the setup creates a thin laser sheet whose rays are parallel along the y-axis only but not along the x-axis. Therefore, along the x-axis, the axis of the capillary tube itself, the laser sheet acts as a one-dimensional extended source whose rays travel through the media in a tilted, but symmetric, manner. This leads to the formation of tip, corresponding to the ray that is exactly Perpendicular to the x-axis, and two symmetric wings, corresponding to pairs of rays having the same angle at each side of the perpendicular ray (in the x–z plane).

It is known that as the concentration increases the speed of laser will decrease due to the crowdies of molecules in dense solutions. The refractive index for leucine and valine are lesser than that for isoleucine. This indicates that the laser speed is accelerating within the leucine and valine mixtures likely due to decrease in the molecular bonds in these 2 amino acids in comparison with isoleucine.

Current methods used for determining the concentrations of the amino acids still can't differentiate between the leucine and isoleucine in a solution and usually gives only

an approximation about their value within the solution. Our results are clearly indicated that each of the amino acid used has a unique behaviour and characterized by a unique equation through which its concentration can be determined using the discussed method. This is also suitable for building up a database for leucine, isoleucine and valine to investigate their concentrations using the capillary tube lenses interferometer with high precession.

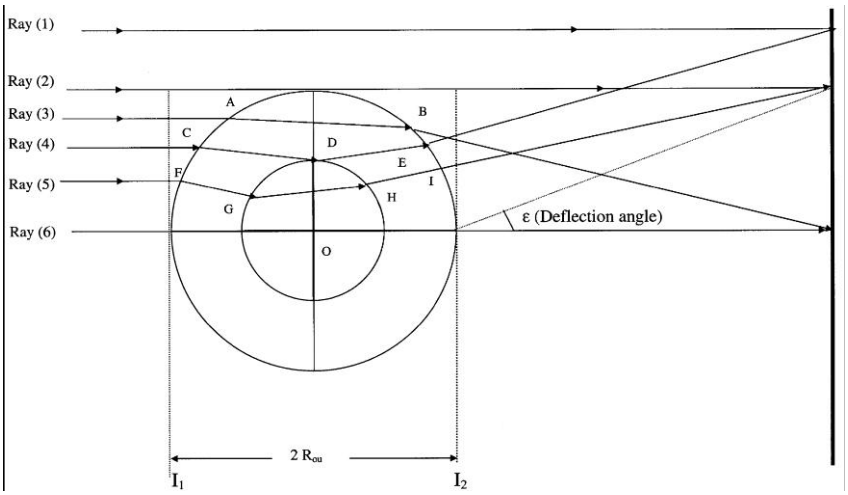

Fig. 6. Ray tracing of selected rays impinging on the upper hemisphere of the capillary tube. The locations of three possible fringes are shown on the screen at the right.

References:

1. H. El-Ghandoor, E. A. Abd El Ghafar, and R. Hassan, "refractive index profiling of a GRIN optical fiber using a modulated speckle sheet of light", Optics & Laser Technology **31** (1999) P. 481.
2. H. El-Ghandoor, I. Nasser, M. Abd-El Rahman, and R. Hassan, "Theoretical model for the transverse interference pattern of GRIN optical fiber using a laser sheet of light," Optics & Laser Technology **32** (2000) P. 281.
3. Holmberg S, Petersen JG. Regulation of isoleucine-valine biosynthesis in. *Saccharomyces cerevisiae. Current Genetics* 1988*;*13*:*207-217. door. Microbiology and Molecular Biology Reviews 2003;67:1-6.*Physiology* 2008*;*146*:*1028-1039.
4. Kohlhaw GB. Leucine biosynthesis in fungi: entering metabolism through the back door. *Microbiology and Molecular Biology Reviews* 2003*;*67*:*1-6.
5. Kandra G, Severson R, Wagner GJ. Modified branched-chain amino acid pathways give rise to acyl acids of sucrose esters exuded from tobacco leaf trichomes. European Journal of Biochemistry 1990;188:385-391.
6. Walters DS, Steffens JC. Branched-chain amino acid metabolism in the biosynthesis of Lycopersicon pennellii glucose esters. Plant Physiology 1990;93:1544-1551.
7. Daschner K, Thalheim C, Guha C, Brennicke A,Binder S. In plants a putative isovaleryl-CoA-dehydrogenase is located in mitochondria. *Plant Molecular Biology* 1999*;*39*:*1275-1282.

8. branched-chain alpha-keto acid dehydrogenase complex in *Arabidopsis* results in accumulation of branched-chain acyl-CoAs and alteration of free amino acid composition in seeds. *Plant Science* 2003*;*165*:*1213-1219.
9. Beck HC, Hansen AM, Lauritsen FR. Catabolism of leucine to branched-chain fatty acids in Staphylococcus xylosus. Journal of Applied Microbiology 2004;96:1185-1193
10. Gu L, Jones D, Last RL . Broad connections in the Arabidopsis seed metabolic network revealed by metabolite profiling of an amino acid catabolism mutant. The Plant Journal 2010;61:579-590.
11. Taylor NL, Heazlewood JL, Day DA, Millar AH. Lipoic acid-dependent oxidative catabolism of alpha-keto acids in mitochondria provides evidence for branched-chain amino acid catabolism in Arabidopsis. Plant Physiology 2004;134:838-848.